Exam Date & Time: 29-Nov-2024 (09:30 AM - 12:30 PM)

MANIPAL ACADEMY OF HIGHER EDUCATION

MIT BLR - BTech III Semester - End Semester Examination - Nov / Dec -2024

Analog Electronic Circuits [ECM-2121]

Marks: 50 **Duration: 180 mins.**

PART-A

Answer all the questions.

1)

A) The CG amplifier shown in Fig. 1A is biased by means of $I_1 = 1$ mA. Assume $\lambda = 0$ and C_1 is very large. (a) What value of R_D places the transistor M_1 100 mV away from the triode region? (b) What is the required W/L if the circuit must provide a voltage gain of 5 with the value of R_D obtained in (a)?

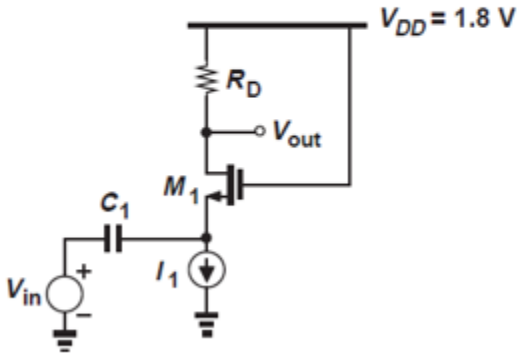

Fig. 1A

(4)

B) Calculate the maximum allowable gate voltage in Fig. 1B, if M_1 must remain saturated, if $\mu_n C_{ox} = 100\ \mu A/V^2$ and $V_{TH} = 0.4$.

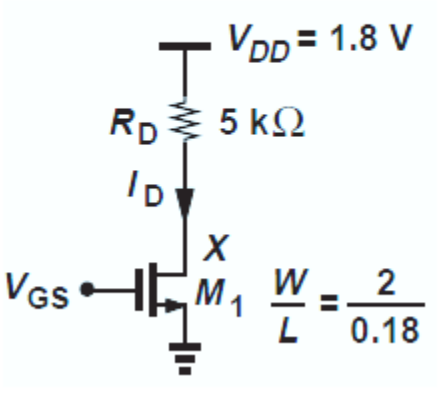

Fig. 1B

(3)

C) (3)

The circuit shown in Fig. 1C incorporates the following device parameters: $(W/L)_{1,2} = 30$, $(W/L)_{3,4} = 40$, $I_{DS1} = I_{DS2} = I_{DS3} = I_{DS4} = 0.5$ mA. If $\mu_n C_{ox} = 100$ $\mu A/V^2$, $\mu_p C_{ox} = 50$ $\mu A/V^2$, $\lambda_n = 0.1$ V^{-1} and $\lambda_p = 0.15$ V^{-1}, determine the voltage gain.

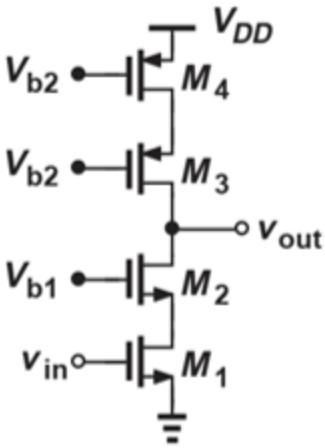

Fig. 1C

2)

An NMOS differential amplifier is operated at a bias current I of 0.4mA and has a W/L ratio of 32, $\mu_n C_{ox}$=200μA/V², V_A=10V, and R_D=5kW. Find

A) $V_{ov}=(V_{GS}-V_t)$, g_m, r_o, and A_d. (4)

B)

Calculate Icopy in the circuit shown in Fig. 2B if I_{REF} =0.6 mA. Assume all of the transistors operate in saturation.

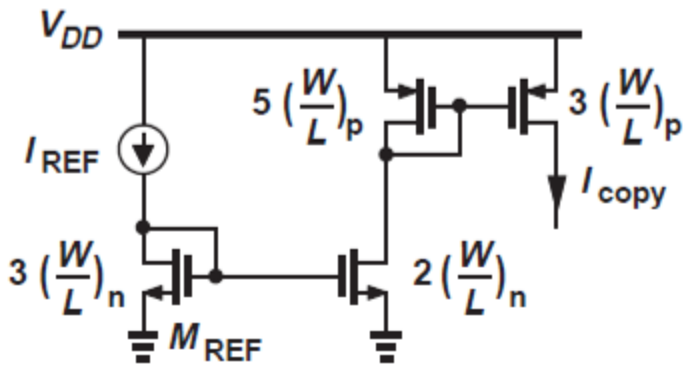

Fig. 2B

(3)

C) (3)

In the circuit of Fig. 2C, determine the maximum allowable value of W/L if M1 must remain in saturation. Assume $\lambda = 0$.

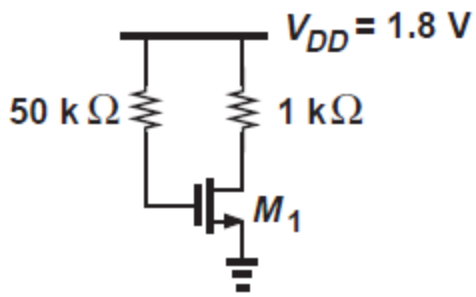

Fig. 2C

3) Find the differential gain, common mode gain and CMRR of the circuit shown in Fig. 3A. Assume $\lambda \neq 0$ and ideal current source 'I_{SS}'.

A) (4)

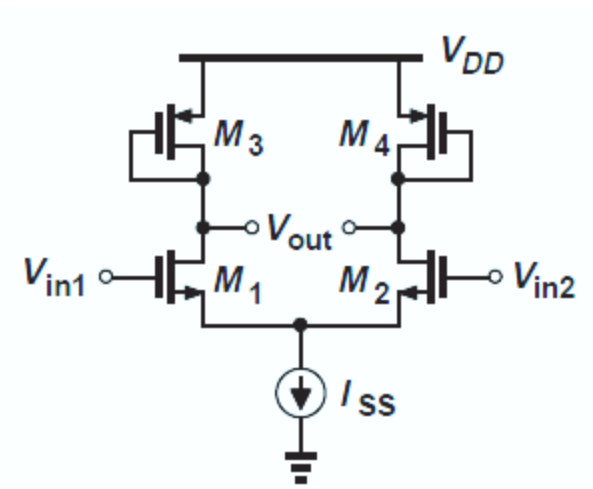

Fig. 3A

B) (3)

For the circuit shown in Fig. 3B find the pole frequencies. Assume $\lambda = 0$, $g_m = 200\Omega^{-1}$, V_{DD}=1.8V, R_S= 250Ω, R_D=2.5KΩ, and C_F=90 fF, calculate C_{in} & C_{out}.

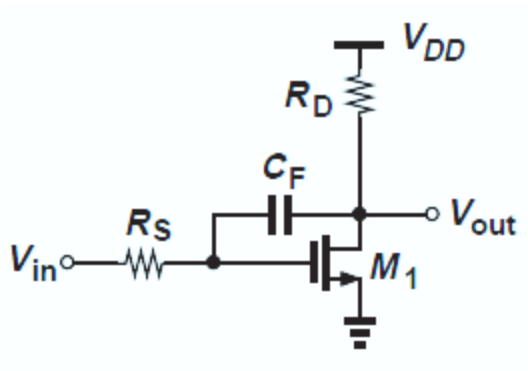

Fig. 3B

c) (3)

In the amplifier of Fig. 3C, $R_D = 10\ k\Omega$ and $C_L = 1$ pF. Neglecting channel-length modulation and other capacitances, determine the frequency at which the gain falls by 15% ? (≈1.5 dB).

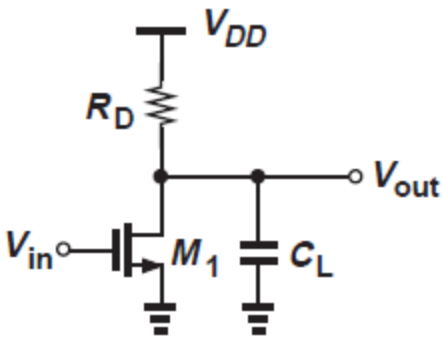

Fig. 3C

4) Identify all the capacitances and reduce the circuit shown in Fig. 4A to compute the poles. Assume $\lambda = 0$.

A)

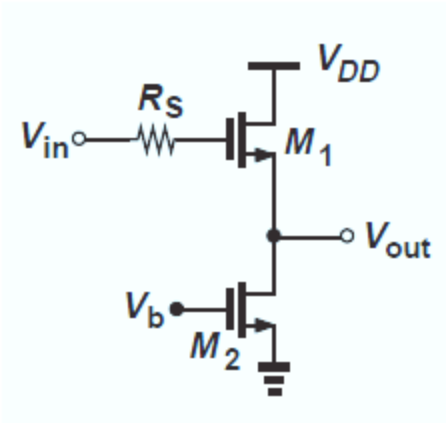

Fig. 4A

(4)

B) Determine the polarity of feedback for the circuits shown in Fig. 4B. And justify the same.

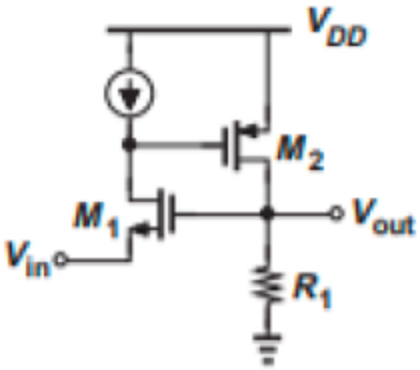

Fig. 4B

(3)

c) (3)

For the block diagram shown in FIG. 4C, Identify the feedback topology and obtain the expressions for I/O impedances.

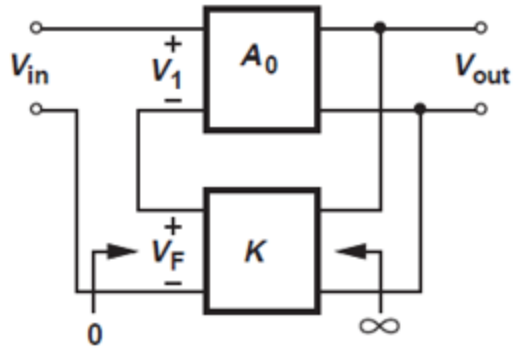

FIG. 4C

5) Determine the input impedance, output impedance & closed loop gain of the stage shown in Fig.5A, if R1 + R2 is very large.

A)

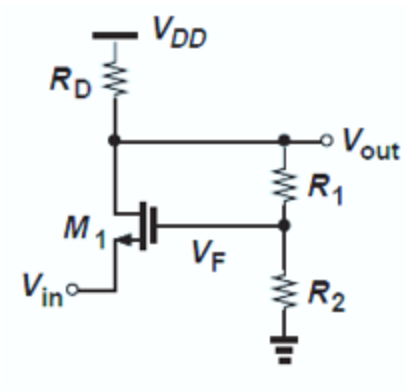

Fig.5A

(4)

B) Determine the expression for % efficiency in Class - A Push - Pull power amplifier and find its maximum efficiency. (3)

c) Explain the working principle of ring oscillator with a neat circuit diagram. Obtain the expressions for minimum gain and frequency of oscillation. Also, find the frequency of oscillation for drain resistance and capacitance of 10KΩ and 10μF. (3)

-----End-----